ISUZU
TRUCKS YOU CAN RELY ON

8X4 CYH460

Model	CYH460	CYH460D
GCM (kg)	62,000	62,000
GVM (kg)	29,000	29,000
Max Power (kW)	338	338
Max Torque (Nm)	2254	2254
Wheelbase (mm)	5980	5980
Cab	Low	Low
Suspension	Steel	Steel

**CYJ460 shown

ENGINE

Engine Model: 6WG1 - TCC
Type: 6 cyl 24 valve, SOHC
Displacement: 15,681cc
Compression Ratio: 16.0:1
Max Power (DIN Nett): 338 kW (460 HP) @ 1800 RPM
Max Torque (DIN Nett): 2254 Nm (1663 lb.ft) @1,300
Emission Control System: Euro V with SCR
Fuel System: Electronically controlled Denso Direct Injection, high pressure common rail, 400 litre rectangular alloy fuel tank with lockable fuel cap, 75 litres Ad Blue
Intake/Exhaust: Turbocharged, intercooled, vertical intake, horizontal exhaust

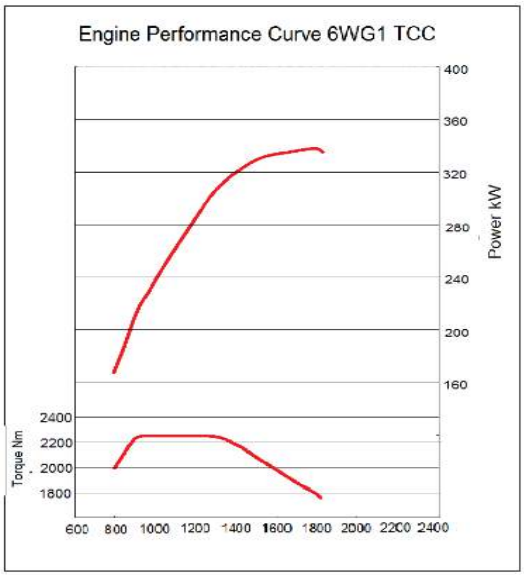

PERFORMANCE

- **1st Gear Gradeability @*GVM:*** *47%/53% D*
- **Est Engine RPM @90km/h** : 1510/1640 *D*

TRANSMISSION

Manual
Ratios (:1) Eaton Road Ranger RTLO18918-B 18 speed
1st 14.40, 2nd 12.29, 3rd 8.56, 4th 7.30, 5th 6.05, 6th 5.15 7th 4.38, 8th 3.74, 9th 3.20, 10th 2.73, 11th 2.29, 12th 1.92 13th 1.62, 14th 1.38. 15th 1.17, 16th 1.00, 17th 0.86, 18th 0.73
Reverse: L/L 15.05 L/H 12.86, H/L 4.03 H/H 3.43
PTO: Opening at bottom, 8 bolt SAE, 474Nm torque capacity
Clutch: Spicer EP1552 ceramic 6-button twin plate 393mm diameter

AXLES

Front Axles: Isuzu FO66 x 2
Type: Elliot reverse I-beam
Capacity: 13200 kgs
Rear Axle: Isuzu RT210/ CYH460D - Isuzu RT260 with "No-Spin" Auto locking differential
Type: Single speed tandem drive with inter-axle diff lock
Integral oil pump
Capacity: 21000kgs/26000kgs (D Model)
Final Drive: Hypoid type, 445mm (17.5") diameter ring gear
Ratio: 4.1:1 / 4.875:1 (D Model)

CHASSIS

Front Suspension
- Alloy steel tapered parabolic leaf springs
- Double acting shock absorbers with stabiliser bar on F1

Rear Suspension
- Isuzu 6-rod and trunnion axle locating system
- Alloy steel parabolic tapered leaf springs

Electrical
- 24 volt negative earth system
- 50 amp alternator
- Batteries - 2 x N120, 840 CCA @ 18°C

Steering
- Power assisted recirculating ball with integral power assistance. Gear Ratio 20.2:1

Brakes
- Dual circuit full air, ABS.
- Drums 410mm diameter
- Front linings 160mm wide, Type 24 chambers
- Rear linings 220mm wide Type 24/30 chambers
- Twin cylinder air compressor 650cc
- Trailer brake hand control with limited travel

Auxiliary retardation
- Isuzu X-Tard air controlled exhaust brake
- Provides up to 350HP (PS) retardation
- Isuzu Giga-Tard permanent magnet drive shaft retarder provides up to 65kg/m silent retardation

Chassis Frame
- Rolled steel channel, cold riveted ladder frame
  Rail dimensions 285 x 85 x 7 mm
  319 x 90 x 7.5mm (D model)
- HT540 weldable steel
- Frame width 850mm, 950mm at engine/trans
- Inner frame reinforcement at suspension mounts

Wheels and Tyres
- 8.25" x 22.5" 165mm offset Alcoa alloy wheels
- 10 stud, 22mm hole size, 335mm PCD
- Tyres 275/70R22.5 148/145 front and rear
- 460D-11R22.5 148/145 front and rear

Please refer to Isuzu Body Builders Guide for data on chassis modifications and body installations

ISUZU
TRUCKS YOU CAN RELY ON

CYH460

CAB AND INTERIOR

CAB EXTERIOR

- All steel construction, standard roof, high tensile steel on cab under-frame with side impact beam reinforcement
- Cab strength equivalent to ECE-R29 standard
- Power cab tilt to 48° with manual hydraulic back-up
- 4 point electronically controlled air bag cab suspension
- Enclosed non-slip cab entry steps with RH step light
- Door mounted 22" heated power main and convex mirrors
- LH side kerb and front under-view mirrors
- External-access equipment locker on left side of cab
- Steel front bumper integral head lamps, fog lamps and indicator
- Halogen multi-reflector headlamps,
- Roof-mounted outline marker lamps
- Reverse alarm buzzer standard

CAB INTERIOR

- Driver's seat - ISRI 6860 air suspended, pneumatic lumbar support, height, rake, auto weight adjustment seat for occupant mass up to 150kg
- SRS including air bag on driver's seat
- Door and pillar entry assist grips both sides

CAB INTERIOR (continued)

- Two overhead storage lockers with CB compatible slot
- Height/reach adjustable steering column, soft-feel urethane steering wheel,
- Electric windows
- Central locking with keyless entry and engine immobiliser
- Air conditioning with redirect to sleeper
- Two 12V 100W accessory power outlets and 24V cigarette lighter
- Door mounted storage pockets, LH and RH glove boxes
- Centre console with storage locker, fold-over storage tray and two storage ports/cup holders
- Carbon fibre style dash facia
- MultiMedia radio/CD/DVD/MP3/WMA Player with 6.2" Touch Screen, Bluetooth, voice dialling, text to speech, SD and USB inputs, on-board recordable memory, optional external cameras with up to 4-way screen, GPS navigation and many other options

Instruments and Controls

- Speedometer with digital odometer and trip meters
- Engine coolant temperature, fuel and AdBlue gauges, dual brake air pressure gauges
- Two-speed wipers with variable intermittent wipe function
- Differential lock switch with "Engaged" light
- Idle speed adjustment switch
- Giga-Tard progressive engagement switch
- LH combination stalk: windscreen wipers/wash control, hazard lamps, X-Tard exhaust brake, Giga-Tard on/off
- RH combination stalk: Indicators, lights & fog lamp switch, headlamp dip switch, cruise control set/resume/cancel
- Multi Display provides : Clock, calendar, fuel consumption data including total economy and fuel consumption, trip distance, trip economy and fuel consumption (when moving), Idle consumption (when stationary), battery voltage.
- Multi info display warnings include: Engine overheat, low coolant level, low oil pressure, low fuel level.

WEIGHTS (kgs)

Model Code	MODELS	RATINGS *		LOADING LIMITS (at ground)*		CHASSIS CAB TARE MASS **		
		GVM	GCM	FRONT ***	REAR	FRONT	REAR	TOTAL
CH0515	CYH460	29 000	62 000	11 000	15 000	5850	3160	9010
CH0315	CYH460D	29 000	62 000	11 000	15 000	5954	3460	9414

* Vehicle ratings and front and rear mass limits are subject to regulatory requirements – Consult your dealer to select a specific vehicle to suit your requirements
** Chassis cab as supplied from the factory including 10 litres of fuel

DIMENSIONS (mm)

Models	WB	OAL	OAH *	FOH	ROH	CA	FI	RI	CE	RT	ORT	FW	RFH *	FFH*	CW	Kerb to Kerb (m)
CYH460	5980	10665	3170	1400	3285	5216	1850	1310	8501	1850	2440	850	1055	1050	2490	21.4
CYH460D	5980	10665	3080	1400	3285	5216	1850	1310	8501	1850	2440	850	1135	1130	2490	21.4

* Unladen condition

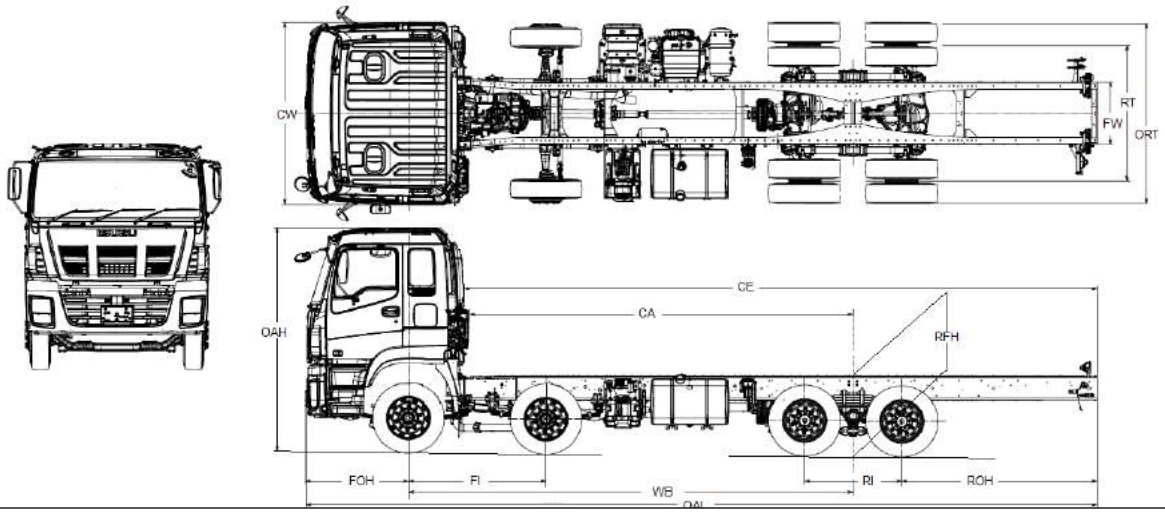

WARRANTY

Full vehicle warranty: 36 months or 250,000 kilometres whichever occurs first
All warranty is subject to terms and conditions as detailed in the Owner's Manual Service and Warranty Supplement

A policy of continuous improvement means that these specifications are subject to change without notice. Contact your Isuzu dealer or visit our website at Isuzu.co.nz to confirm specifications. Images of vehicles are representative only and may differ slightly from the actual vehicle